FORMULA STUDENT ALPE ADRIA 2024 REGISTRATION QUIZ ANSWERS

Question 1

(3 points)

You and your team just passed scrutineering and now you are cooking stew (corba) for you and 170 of your friends in Formula Student Alpe Adria 2024. Each person gets a portion measuring exactly 300 ml. You cook in a spherical pot with an inner diameter D = 0,5 m. The pot has one circular opening at the top measuring A = 30 cm in diameter. How much do you have to fill up the pot to have the exact amount of stew for everyone? You can only measure the height between the top of the opening and the liquid surface. Round the answer (x) to the nearest centimetre.

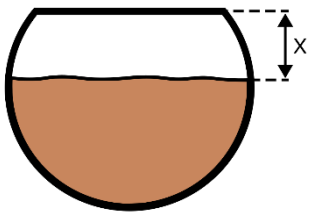

SOLUTION: 10 cm

Calculate volume:

$$V_{stew} = (170+1)\cdot 300\ \text{mL} = 51300\ \text{mL} = 51300\ \text{cm}^3$$

Calculate volume of the sphere not containing stew:

$$V_{sphere} = \frac{\pi d^3}{6} = \frac{\pi \cdot 50^3}{6} = 65449{,}847\ \text{cm}^3$$

$$V_{empty} = V_{sphere} - V_{stew} = 65449{,}847 - 51300 = 14149{,}847\ \text{cm}^3$$

Height from top of the sphere to the stew surface:

$$V_{empty} = \frac{\pi h_1^2}{3}(3r - h_1);\ r = \frac{D}{2} = 25\ \text{cm}$$

$$\frac{\pi}{3}h_1^3 - \pi r h_1^2 + V_{empty} = 0$$

$$h_{11} = -12{,}4316\ \text{cm}$$

$$h_{12} = 15{,}007\ \text{cm}$$

$$h_{13} = 72{,}4239\ \text{cm}$$

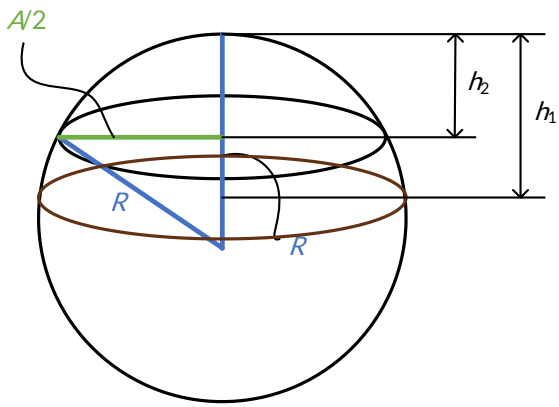

Height from the top of the sphere to the opening:

$$h_2 = R - \sqrt{R^2 - \frac{A^2}{4}} = 25 - \sqrt{25^2 - \frac{30^2}{4}} = 5\ \text{cm}$$

Height of the stew surface to the opening:

$$h = X = h_1 - h_2 = 15{,}007 - 5 = 10\ \text{cm}$$

Question 2

(1 point)

You are preparing for going on a competition and packing spare car parts in a single box. The maximum weight the box can carry is 25 kg. Each spare part is different, has a value and you must pack the box with most valuable parts, taking maximum one part of a same kind. The table below shows details for each part. Decide on which parts you will carry in a way that is the optimal regarding box capacity and part value. Mass is in kg and Value is in *monetary units*.

Note: Write the result in the following format: X, X,... starting from the lowest to the highest number.

Part	Mass	Value
1	5	4
2	7	8
3	8	6
4	2	11
5	4	2
6	7	6
7	6	2

SOLUTION: 2, 3, 4, 6.

Students are free to do their calculations by hand or use any Excel or other computational tools for scenarios/optimization. Parts to be taken to the competition in the end are 2, 3, 4, and 6.

Input data:

Part	Mass	Value
1	5	4
2	7	8
3	8	6
4	2	11
5	4	2
6	7	6
7	6	2

Box capacity:

MAX_mass = 25 kg

Maximum possible value:

MAX_value = 39 units

Optimization and part selection:

Part	Mass	Value	Taken:
1	5	4	0
2	7	8	1
3	8	6	1
4	2	11	1
5	4	2	0
6	7	6	1
7	6	2	0

Total box weight:

Mass = 24 kg

Value taken:

Value = 31 units

Parts to be taken: **2, 3, 4, 6.**

Accept also 1, 2, 4, 5, 6.

Question 3

(1 point)

How efficient is my machine really?

At the beginning of the season, one of your aims is to design a permanent magnet synchronous machine for your tractive system. The machine's total losses can be determined as follows:

$$P_{total} = P_{Cu} + P_{Fe} + P_{mech} + P_{other}$$

P_{Cu} represents the copper losses in the system. How much copper losses will occur assuming these specs?

$P_{rated} = 50\,\text{kW}$

$I_{rated} = 72000\,\text{mA}$

$U_{rated} =$ reffer to FSG's maximum permitted voltage

$R_S = 0{,}0001\,\text{k}\Omega$

$R_{Eddy} = 50000\,\mu\Omega$

Note: Enter your result with two decimal digits.

SOLUTION: 388,8 W

EXPLANATION:

Normalize specs:

$P_{rated} = 50\,\text{kW}$ (not needed)

$I_{rated} = 72000\,\text{mA}$ (72 A)

$U_{rated} =$ reffer to FSG's maximum permitted voltage (not needed)

$R_S = 0{,}0001\,\text{k}\Omega$ (0,1 Ω)

$R_{Eddy} = 50000\,\mu\Omega$ (0,05 Ω)

$$P_{Cu} = I_{eff}^2 \cdot R_{total}$$

$$I_{eff} = \frac{I_{rated}}{\sqrt{2}}$$

$$P_{Cu} = \left(\frac{I_{rated}}{\sqrt{2}}\right)^2 \cdot R_{total}$$

$$R_{total} = R_S + R_{Eddy}$$

$$P_{Cu} = \left(\frac{I_{rated}}{\sqrt{2}}\right)^2 \cdot \left(R_S + R_{Eddy}\right) = \left(\frac{72}{\sqrt{2}}\right)^2 \cdot (0{,}1 + 0{,}05) = 388{,}8\,\text{W}$$

Question 4

(3 points)

4.1. Let's suppose a car with a mass of 760 kg and that in 2 seconds is capable of going from 300 km/h to 265 km/h (standard atmospheric conditions: $\rho = 1{,}225\,\text{kg/m}^3$ perfect tire tread and no additional mechanical losses) in 2 seconds. What is its coefficient of resistance SC_x?

4.2. In order to establish a visual reference so that the driver knows when to start his manoeuvre, how many meters does the car travel in Coast Down?

QUESTION 3 WITHDRAWN

4.1. SOLUTION: 0,98

EXPLANATION:

Using the fundamental dynamic equation, we have:

$$m\cdot\ddot{x}=\frac{1}{2}\cdot\rho\cdot SC_x\cdot\dot{x}^2$$

During the 2 s of coast down, the speed reduces from 300 km/h (83,33 m/s) to 265 km/h (73,61 m/s), and the mean speed of the car is 282,5 km/h (78,47 m/s, we can consider this value as car speed value in the previous equation). Then, we have:

$$760\cdot\frac{83{,}33-73{,}61}{2}=\frac{1}{2}\cdot 1{,}225\cdot SC_x\cdot 78{,}47$$

Finally: $SC_x=0{,}98$

4.2. SOLUTION: 156,9 m

EXPLANATION:

The medium speed of the car during the coast down is 282,5 km/h (78,47 m/s). So, during the 2 s of coast down, the car travels a distance of $78{,}47\cdot 2=156{,}9\,\text{m}$.

Question 5

(3 points)

Suppose you have a permanent magnet electric motor with fixed space for windings that needs to have copper windings installed and will be connected directly to the battery that has fixed number of cells, but configuration (number of series and parallels) is not yet set. Battery cells are closely packed without separation into module. You want to have maximum power without overheating the battery and motor and maximum efficiency.

Assumption:

- Battery cells are closely packed without separation into modules.
- Commutation is resolved and has no losses.
- Although it is not the same depending on the configuration, positive and negative busses of the battery and the wires connecting to the motor are assumed to have irrelevant losses for simplicity.
- Battery and motor operating voltage will match.
- Inductance.

While ignoring battery main positive and negative buses and short wire from buses to the motor windings, do you go for:

a) Fully utilizing winding space with more turns of thinner wire because it will result in higher operating voltage of the motor, thus less current for the same power meaning less losses and better efficiency. Battery current will also be lesser leading to less heating.
b) Wire thickness in motor and battery configuration don't impact efficiency and power if winding space is fully utilized and battery connections are as short as possible.
c) Fully utilizing winding space with less turns off thicker wire as it will be able to pass more current so more power will be produced, plus motor will spin faster for the same voltage.

Note: First write the answer and then explanation. 1 point for right answer, 2 points for explanation backed up with equations.

QUESTION 5 WITHDRAWN

QUESTION 5 WITHDRAWN

SOLUTION: b)

EXPLANATION:

Electromagnetic force is calculated by $F = I \cdot L \cdot B$

Voltage produced by wire moving in magnetic field is calculated by: $V = B \cdot L \cdot v$

Losses are: $P_{loss} = I^2 \cdot R$

I... current [A]

L... wire distance in magnetic field

v... speed of wire in magnetic field

As same space is filled with more turns of thinner wire and cross section of copper in winding space stays the same nothing is changed except operating voltage and current. With more turns, operating voltage rises and operating current drops. Maximum torque is determined by number of electrons and their speed passing through magnetic field. It doesn't matter if they are separated into several thin copper strands or are all on one thick copper wire as long as cross section of copper stays the same which it does as you have fixed space for windings in a given motor. Maximum motor speed is determined by mechanical design of the motor. Separating thick wire into several thinner ones of the same end cross section does not influence it as long as they are mechanically secured. Power losses in motor also stay the same even though power loss is function of current squared because you have thinner wire which has more resistance, and you have more of it.

Benefits of higher motor operating voltage are for inverter and HV wiring in the rest of the vehicle as those wires and components can be much thinner, smaller and lighter as they only see current of "one turn" having much smaller $P_{loss} = I^2 \cdot R$

Question 6

(1 point)

Consider vehicle with a track width of 1200 mm and suppose it is balanced left-right. Target set for vehicle design is to have 25% of total weight on inside wheels during cornering at 1,2g. Calculate the maximum Centre of Gravity (CoG) height to achieve the target. Round the answer to the nearest millimetre.

SOLUTION: 250 mm

EXPLANATION:

If the car is balanced left-right, the inside wheels now have $0{,}5 - 0{,}25 = 0{,}25 = 25\%$ of total weight on them.

LLT... total lateral load transfer as a fraction of total weight [-]

h... height of the CoG [mm]

t ... track width [mm]

A_Y... lateral acceleration [g]

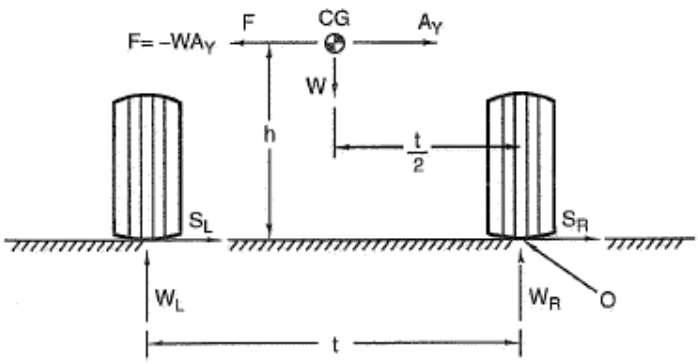

$$LLT = A_Y \cdot \frac{h}{t} \rightarrow h = LLT \cdot \frac{t}{A_Y} = 0{,}25 \cdot \frac{1200}{1{,}2} = 250 \text{ mm}$$

Question 7

(5 points)

Figure 7.1. shows the shaft from a Formula Student car from the year 2530 on which there are three pulleys. The shaft is supported on a radial-axial bearing at point A and a radial bearing at point B. The pulley forces are shown in the side view in figure 7.2 It is necessary to determine the shaft diameter d (round to a whole number) according to the theory of maximum shear stress.

Parameters:
$F_1 = 500$ N, $F_3 = 500$ N, $a = 0{,}25$ m, $D_1 = 240$ mm, $D_2 = 320$ mm, $D_3 = 400$ mm, $\sigma_{allow} = 120$ MPa.

Note: F_1 forces are parallel and at an angle of 45° to the y axis. F_2 forces are horizontal and parallel, F_3 forces are vertical and parallel.

7.1.

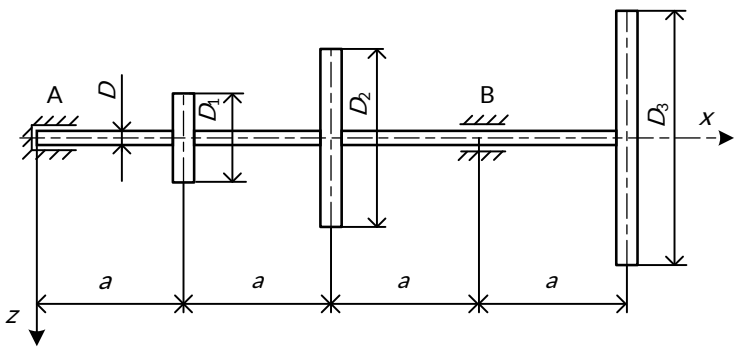

7.2.

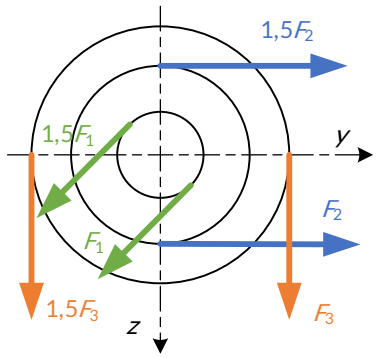

SOLUTION: 32 mm

EXPLANATION:

The force F_2 will be obtained from the balance equation of the shaft for the x axis:

$$\sum M_x = 0; \quad -M_1 + M_2 - M_3 = 0$$

$$M_2 = M_1 + M_3$$

$$0{,}5F_2 \cdot \frac{D_2}{2} = 0{,}5F_1 \cdot \frac{D_1}{2} + 0{,}5F_3 \cdot \frac{D_3}{2}$$

$$F_2 = 1000 \text{ N}$$

Then we must observe the shaft first in the *xz* plane to obtain the F_Q and M_y diagrams, and then in the *xy* plane to obtain the F_y and M_z diagrams. Lastly, we must obtain the M_t diagram, observing the torsional moments on *x* axis.

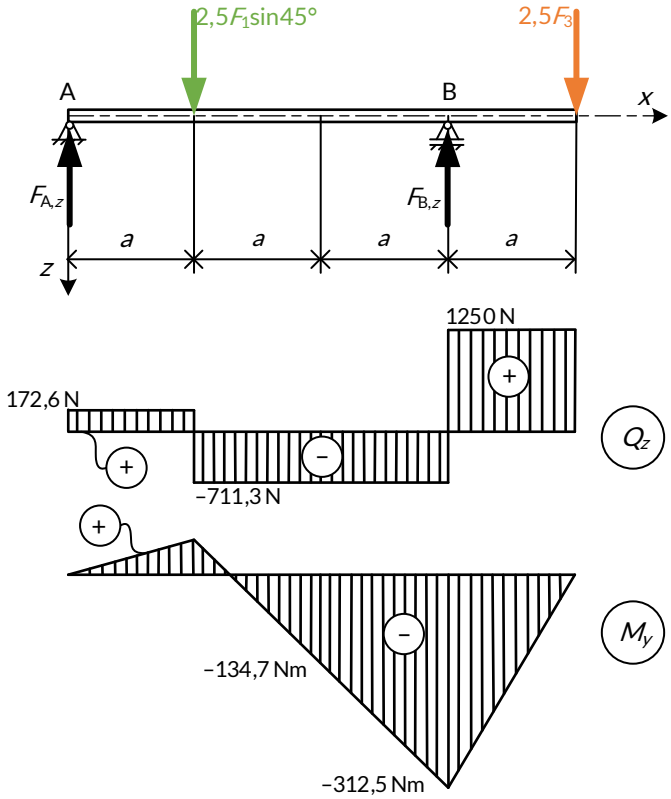

$$\sum F_z = 0;\ -F_{Az} - F_{Bz} + F_{1z} + 2{,}5F_3 = 0$$
$$\sum M_A = 0;\ F_B \cdot 3a - F_{1z} \cdot a - 2{,}5F_3 \cdot 4a = 0$$
$$F_{Bz} = 1961{,}3\,\text{N}$$
$$F_{Az} = 172{,}6\,\text{N}$$

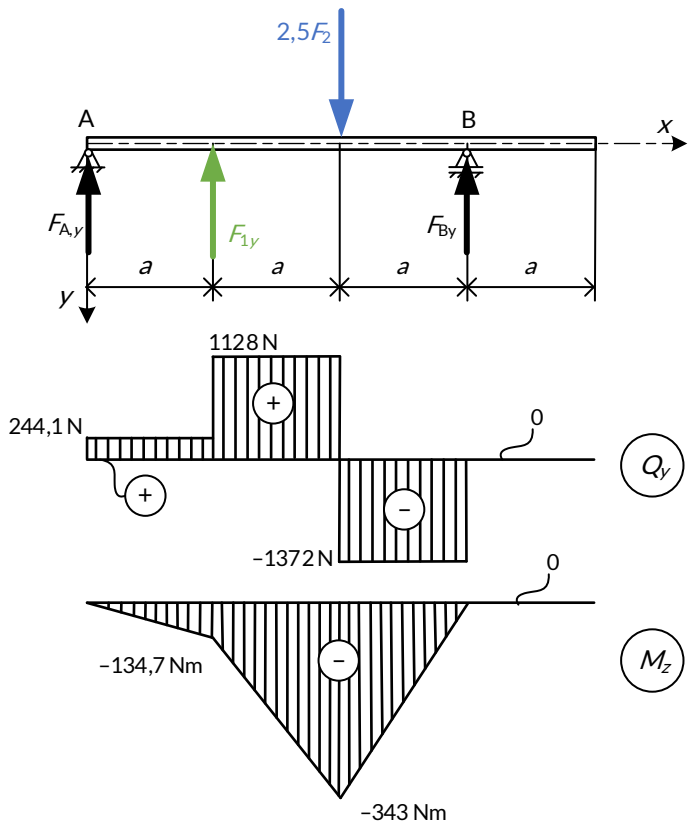

$$\sum F_y = 0;\ -F_{Ay} - F_{By} - F_{1y} + 2{,}5F_2 = 0$$
$$\sum M_A = 0;\ -F_{By} \cdot 3a - F_{1y} \cdot a + 2{,}5F_2 \cdot 2a = 0$$
$$F_{By} = 1372\,\text{N}$$
$$F_{Ay} = 244{,}1\,\text{N}$$

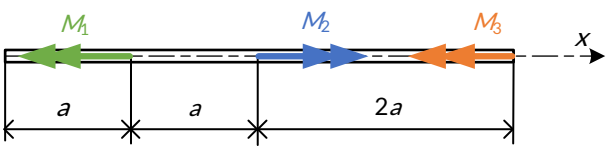

$$M_1 = 0{,}5 F_1 \cdot \frac{D_1}{2} = 30\ \text{Nm}$$

$$M_2 = 0{,}5 F_2 \cdot \frac{D_2}{2} = 80\ \text{Nm}$$

$$M_3 = 0{,}5 F_3 \cdot \frac{D_3}{2} = 50\ \text{Nm}$$

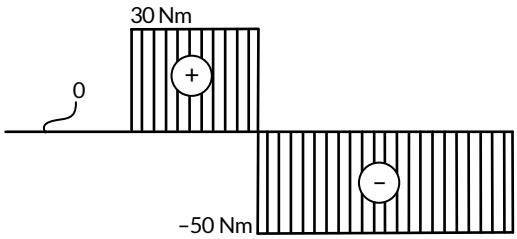

Critical point is at bearing B, which indicates a maximum moment:

$$\sigma_{x\max} = \frac{M_{\max}}{\frac{\pi}{64} d^4} \cdot \frac{d}{2} = \frac{\sqrt{M_{y\max}^2 + M_{z\max}^2}}{\frac{\pi}{32} d^3}$$

$$\tau_{\max} = \frac{M_{t\max}}{\frac{\pi}{64} d^4} \cdot \frac{d}{2}$$

For the biaxial state of stress in the *xy* plane, the main stresses are:

$$\sigma_{1,2} = \frac{\sigma_{x\max} + 0}{2} \pm \sqrt{\left(\frac{\sigma_{x\max} + 0}{2}\right)^2 + \tau_{\max}^2}$$

$$\sigma_{eqv} = \frac{32}{\pi d^3} \cdot \sqrt{M_{y\max}^2 + M_{z\max}^2 + M_{t\max}^2}$$

The strength condition reads:

$$\sigma_{eqv} \le \sigma_{allow}$$

$$\frac{32}{\pi d^3} \cdot \sqrt{M_{y\max}^2 + M_{z\max}^2 + M_{t\max}^2} \le \sigma_{allow}$$

$$d \ge \sqrt[3]{\frac{32}{\pi} \frac{\sqrt{M_{y\max}^2 + M_{z\max}^2 + M_{t\max}^2}}{\sigma_{allow}}}$$

$$d \ge 0{,}0316\,\text{m}$$

$$d = 32\,\text{mm}$$

Question 8

(5 points)

Suppose you have air as a working substance in the left Joules process. The heat is supplied to the working substance from the cold store where the constant temperature is -10°C, and it is removed from the working substance to the environment with a constant temperature of 22°C. Manometers on heat exchangers show values of 0,5 bar and 2,5 bar. The lowest temperature of the working substance during isobaric cooling is 3 °C higher than the ambient temperature, and the highest temperature of the working substance during isobaric heating is equal to the temperature in the cold store.

8.1. How much heat flow does the working substance give to the environment, if 10 kW of heat flow is removed from the cold store (and given to the working substance)? **Note**: answer with + or – from the cold store's point of view.
8.2. How much power is required to carry out such a process? Ambient pressure is 750 mm Hg.
8.3. In addition to the task, it is necessary to draw *p*,*V* and *T*,*s* diagrams!

Note: Round answers from 8.1. and 8.2. to two decimal numbers.

8.1. SOLUTION: -12,74 kW.

EXPLANATION:

The manometers show overpressure, so isobaric changes of state occur at pressures $\left(p_{ambient} = 750 \text{ mm Hg} = 1 \text{ bar}\right)$:

$$p_{\min} = p_{ambient} + p_{p,\min} = 1{,}5 \text{ bar} \qquad T_4 = 234{,}04 \text{ K } (-39{,}11 \text{ °C})$$
$$p_{\max} = p_{ambient} + p_{p,\max} = 3{,}5 \text{ bar} \qquad T_2 = 335{,}23 \text{ K } (62{,}08 \text{ °C})$$

Isobaric exchanged specific heat flows are:

$$q_{1-4} = c_p\left(T_1 - T_4\right) = 29{,}25 \text{ kJ/kg}$$
$$q_{2-3} = c_p\left(T_3 - T_2\right) = -37{,}26 \text{ kJ/kg}$$

Due to the equality of the mass flow of the working substance in all stages of the process, it can be stated that:

$$\Phi_{2-3} = \Phi_{4-1} \cdot \frac{q_{2-3}}{q_{4-1}} = -45860 \text{ kJ/h} = -12{,}74 \text{ kW}$$

8.2. SOLUTION: -2,74 kW.

EXPLANATION:

For left circle thermic system, it is valid: $P = \sum \Phi_i = \Phi_{\text{sup.}} + \Phi_{\text{rem.}}$, so the power required to drive the process is equal to:

$$P = \Phi_{2-3} + \Phi_{4-1} = -45860 + 36000 = -9860 \text{ kJ/h} = -2{,}74 \text{ kW}$$

8.3. Diagrams:

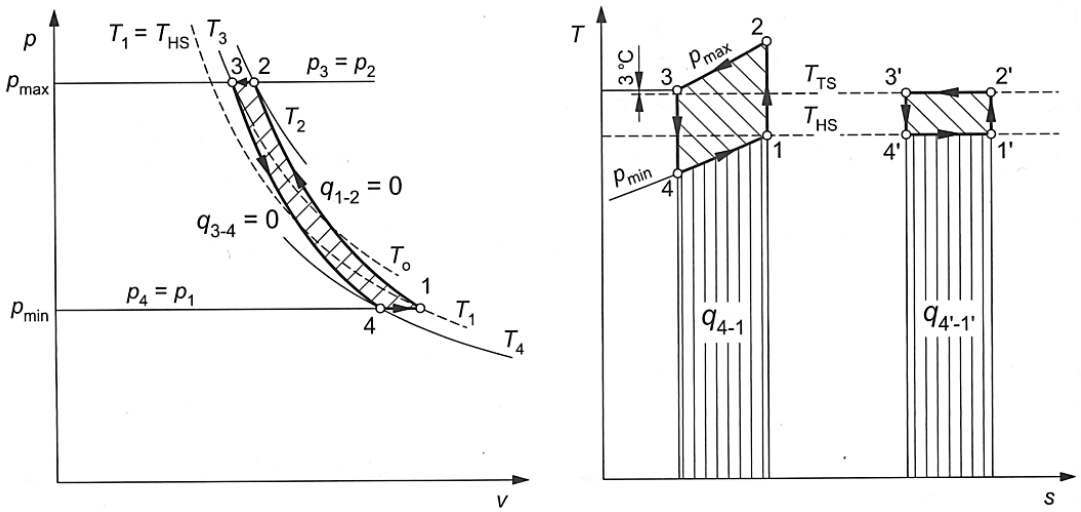

Question 9

(3 points)

The figure below represents a simplified hydraulic system consisting of a pump, a pressure relief valve and two single acting or plunger cylinders that need to lift loads.

Given: m_1, A_1, Q_1

Answer and calculate:

9.1. Do the piston rods of the cylinder move simultaneously or one behind the other? Explain the sequence of the piston rod motion.
9.2. Is the movement of both piston rods ensured by the adjusted pressure p_v on system pressure relief valve? Why?
9.3. Calculate the speed of movement of both piston rods using the given values.

Note: Both cylinders are in a retracted position. Give all the answers in "*coefficient x variable*" form.

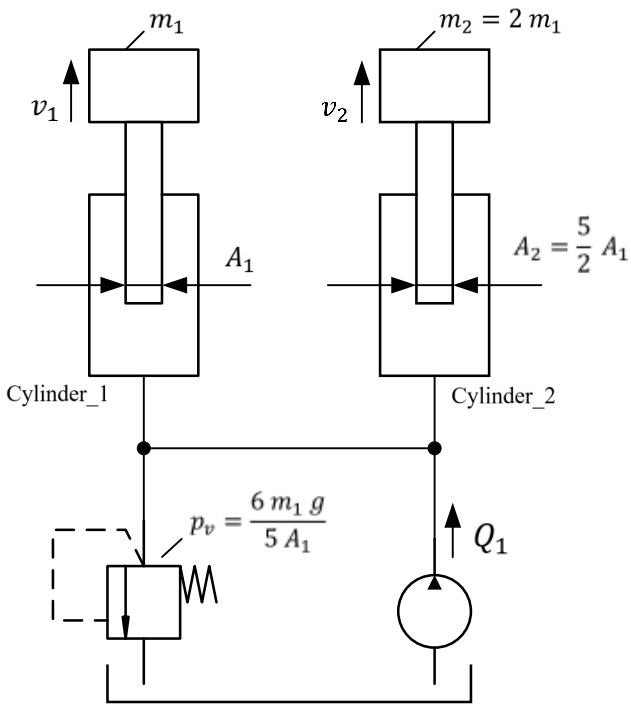

9.1. SOLUTION & EXPLANATION:

$F = m \cdot g$

The pressure at any point in the fluid is equal in all directions (Pascal's law).

The pressure comes from resistance to the oil flow.

$$p_1 = \frac{F_1}{A_1} = \frac{m_1 g}{A_1}$$

$$p_2 = \frac{F_2}{A_2} = \frac{m_2 g}{\frac{5}{2} A_1} = \frac{4}{5} \frac{m_1 g}{A_1}$$

It follows: $p_2 > p_1$, which means that the piston rod of cylinder 2 is pulled out first.

9.2. SOLUTION & EXPLANATION:

Movement is ensured because the following condition is satisfied: $p_v = \frac{6 m_1 g}{5 A_1} > p_1 > p_2$

9.3. SOLUTION & EXPLANATION:

Cylinder Speed = Inlet Flow Rate / Cylinder Area

$$v_1 = \frac{Q_1}{A_1}$$

$$v_2 = \frac{Q_1}{A_2} = \frac{Q_1}{\frac{5}{2} A_1} = \frac{2}{5} \frac{Q_1}{A_1}$$

Question 10

(3 points)

While testing your CV car, the driver notices the rear of the car behaves differently in left and right corners when he starts driving. After a couple of laps, the problem almost disappears. You suspect the reason of this behaviour might be the exhaust, which heats up the aluminium upper rear right A-arm and cools down while driving.

It turns out, the exhaust can increase the temperature of the upper A-arm by 200 °C! Calculate by how much would the raised temperature change the camber on the rear right wheel. Dimensions of components at the nominal temperature are presented on the figure below. Bottom A-arm is perpendicular to the vertical chassis member. Write the answer in degrees rounded to the nearest one decimal place number.

Note: Linear expansion coefficient for aluminium is 0,000023 m/m °C.

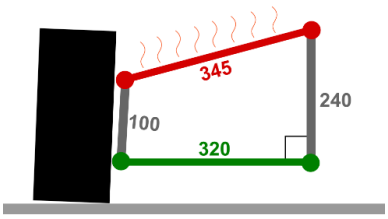

SOLUTION: 1 °C

EXPLANATION:

Calculate the diagonal C which stays constant during heating:

$$C=\sqrt{320^2+240^2}=400 \text{ mm}$$

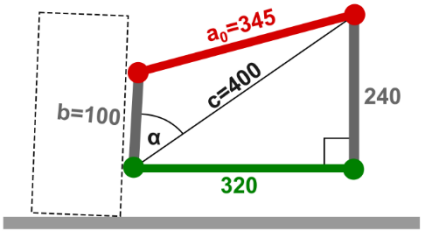

Calculate the angle alpha:

$$\alpha_{cold}=\cos^{-1}\left(\frac{100^2+400^2-345^2}{2\cdot 100\cdot 400}\right)=50{,}42°$$

Calculate the length change for a:

$$a_1=a_0+a_0\cdot c_{TE}\cdot \Delta T=345+345\cdot 0{,}000023\cdot 200=346{,}587 \text{ mm}$$

Calculate the new angle alpha:

$$\alpha_{hot}=\cos^{-1}\left(\frac{100^2+400^2-346{,}587^2}{2\cdot 100\cdot 400}\right)=51{,}43°$$

Angle change:

$$\Delta\alpha=\alpha_{hot}-\alpha_{cold}=51{,}43-50{,}42=1{,}0°$$

Question 11

(3 points)

Assume an electric formula student car, including driver, as a point mass of 220 kg with no aerodynamic and rolling resistance.

Assume you can regenerate down to a standstill after each acceleration run and the car is teleported back to the start, as it happens in simulation world.

11.1. After long and brutal months designing and building the car, the team is finally ready to hit the test track and the team's Performance Engineer puts a Track Test Request on the run plan for the afternoon with 20 acceleration runs to tune the software to perfection.

To execute all the other test items on the list, your Race Engineer asks you to budget the battery energy for the day to plan charging breaks, debriefs and setup changes to make the most out of your very limited test time.

Based on your experience you will finish the first run at 90 kph, and with each run, as the tyres heat up and your Colleague tunes the software, by sheer luck you expect for every run the car to cross the line with an extra 1 kph (e.g. the tenth run finishes at 99 kph).

How much battery energy in kWh is required to accelerate this car from standstill for these twenty runs when the overall powertrain efficiency is 93,6%? Round the answer to one decimal number.

11.2. This year's car features electric motors at the rear axle only, and your brake bias is 65% on the Front (friction brakes), while your rear motors regenerate the braking power back to your battery. How many runs can you complete with a total of 0,3 kWh, when again assuming the first run finishes at 90 kph and you manage to improve the car by 1 kph per run?

11.3. What is the least amount of energy your battery must hold at the start of the test program when you take the car's regeneration into account? Make sure you do not run out of energy on the final run! Round the answer to three decimal numbers

11.1. SOLUTION: 0,5 kWh.

EXPLANATION:

$$E_{\text{disengarge,n}} = \frac{1}{2} \cdot m \cdot v_n^2 \cdot \frac{1}{eff}$$

$$\sum_0^{20} E_{\text{disengarge,n}} = 0{,}5\,\text{kWh}$$

Conversion from J to kWh = $\frac{1}{3{,}6 \cdot 10^6}$

Conversion from kph to m/s = 1/3,6

11.2. SOLUTION: 17 runs

EXPLANATION:

$$E_{\text{charge,n}} = E_{\text{disengarge,n}} \cdot (1 - \text{rBrakeBias}) \cdot eff$$

$$E_{\text{total}} = E_{\text{disengarge,n}} - E_{\text{charge,n}}$$

$$\sum_{n=1}^{n\text{Runs}} E_{\text{total},n} \Leftarrow 0{,}3\,\text{kWh} \xrightarrow{\text{yields}} n\text{Runs} = 17$$

11.3. SOLUTION: 0,356 kWh.

EXPLANATION: This is a slightly tricky one, because you take the sum of 19 runs and add only discharge of run #20, otherwise you would end up going negative in the final run (or stopping on track).

Question 12

(1 point)

While having controller P perfectly tuned on some simple 1st order system, you decide to filter the input signal with first order low pass filter with cut-off frequency of 50 Hz. If the control loop had 30 ms of delay before, to maintain the same stability, to what value do you have to set P gain now if it was set to 100 before? Round the answer to three decimal numbers.

SOLUTION: 59,988.

EXPLANATION:

50 Hz filter has a time constant of 20 milliseconds (tf: num=[1], den=[0,02, 1] which is considered as its delay, increasing the total loop delay to 30 + 20 = 50 ms or x 1,667.

So, to get same overshoot you need to dial down proportional gain x 1,667 which is 100/1,667 = 59,988.

Other stability evaluation methods can be used but should give similar result, thus tolerance in the answer.

QUESTION 12 WITHDRAWN

Question 13

(3 points)

The table below defines activities of a certain process, their dependence and duration.

Activity	Depends on	Duration
A	/	3
B	A	4
C	A	6
D	B	3
E	A	2
F	C, D	4
G	E	7
H	B	8
I	H	2
J	F, H	3
K	F, G	10
L	I	5
M	J	7
N	L, M, K	2

This task requires you to:

13.1. Draw a precedence diagram of the whole process, method is *finish to start*, final version of the diagram should not contain fictional nodes if they were used during creation, use of Fulkerson's rule is advised.

13.2. Define which is the critical path. Write the answer in this format: X-X-X… alphabetically.

13.3. Draw a linear time plan of the process:

- Spare/idle/reserve times should be marked with one type of line.
- Activity times should be marked with another type of line.
- Critical path should be marked with another type of line.

13.1. SOLUTION: Anything that depicts the same data/numbers/content as shown below, students are free to draw by hand or use computer tools and a lot of freedom is allowed.

EXPLANATION:

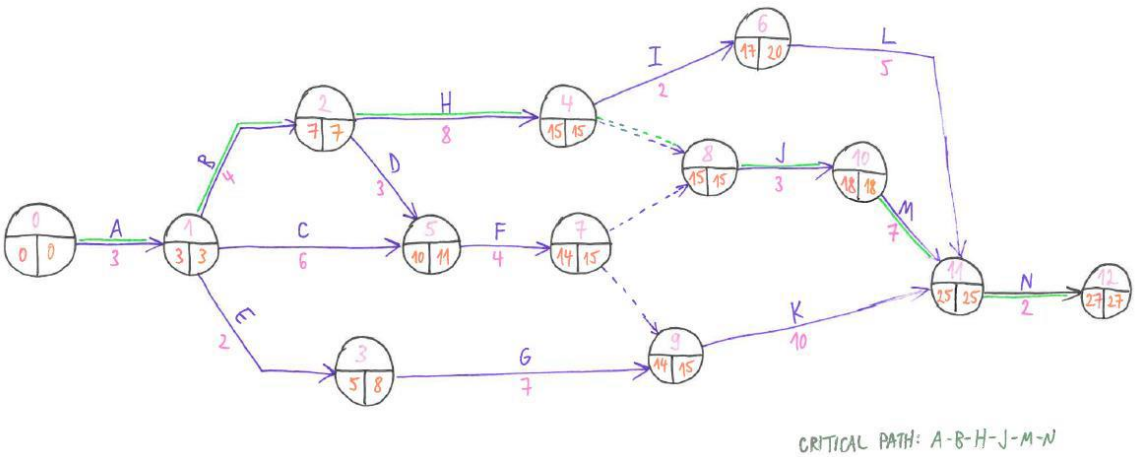

13.2. SOLUTION: A-B-H-J-M-N

13.3. SOLUTION:

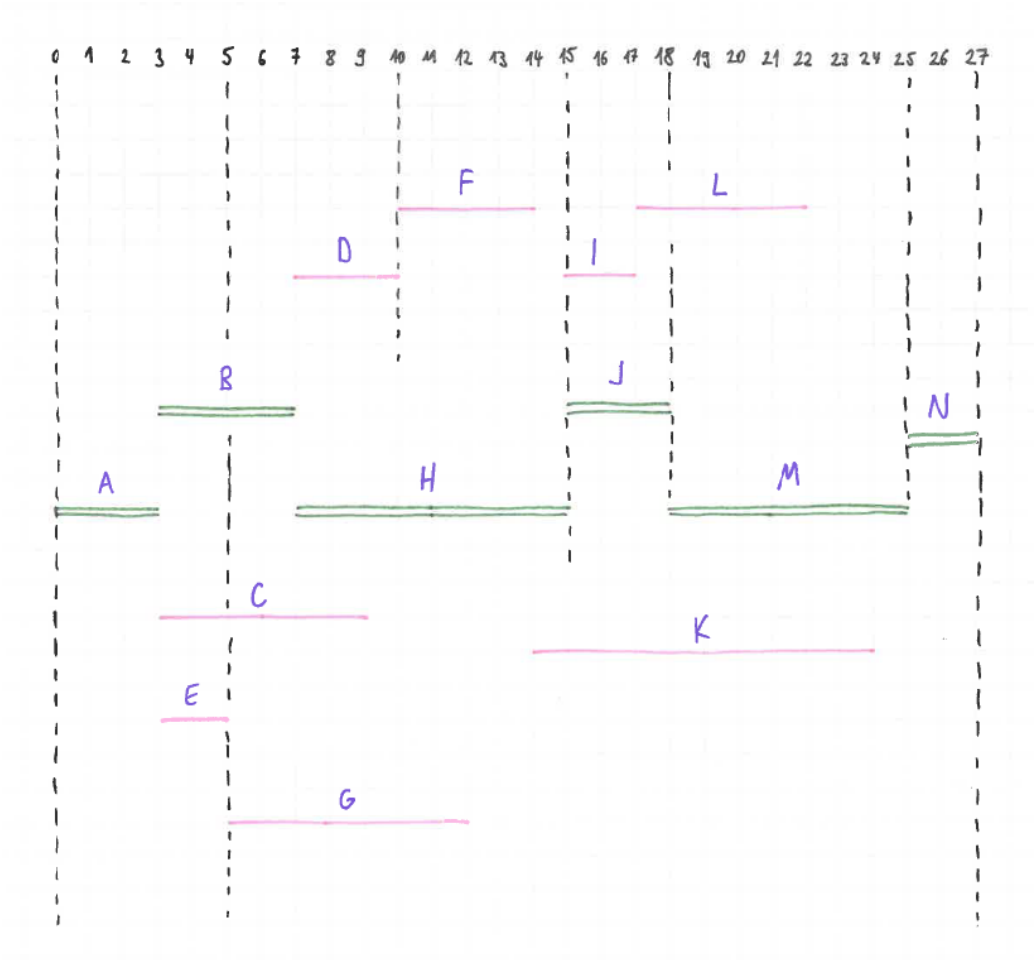

Question 14

(1 point)

A rear-wheel driven Formula Student car weighs 125 kg, the front wing is 240 mm from the ground at the highest point, the rear wing is 1250 mm above the ground, and it has a single brake acting on a limited-slip differential, with one hydraulic circuit. Which of the offered statements are true?

Note: Multiple correct answers are possible and all of them need to be marked.

a) everything is according to the rules
b) front wing height is illegal
c) rear wing height is illegal
d) the car can have one brake
e) the brake system must have more than one hydraulic circuit
f) weight is under the lower limit

SOLUTION: c) and e)

EXPLANATION:

c) – mandates that all aerodynamic devices rearward of a vertical plane through the rearmost portion of the front face of the driver head restraint support, excluding any padding, set to its most rearward position must be lower than 1,2 m from the ground.

e) – T 6.1.2 (FSG Rules 2024 V1.1) mandates that the brake system must have two independent hydraulic circuits.

Question 15

(3 points)

Have you ever paid attention during the tilt test? You will now!

In the figure below, a tilt test by a random Formula Student competition is being presented. The motion of the collar at A is controlled by a motor at B such that when the collar is at $s_A = 3$ m, it is moving upwards at 2 m/s.

15.1. Determine the velocity of a point on the cable as it is drawn into the motor B at this instant.

15.2. What is the angle β at the same moment if the horizontal component of the distance between points A and C is by 8000% larger than the minimum allowed ground clearance for a Formula Student car?

Note: Round the answers to 1 decimal number.

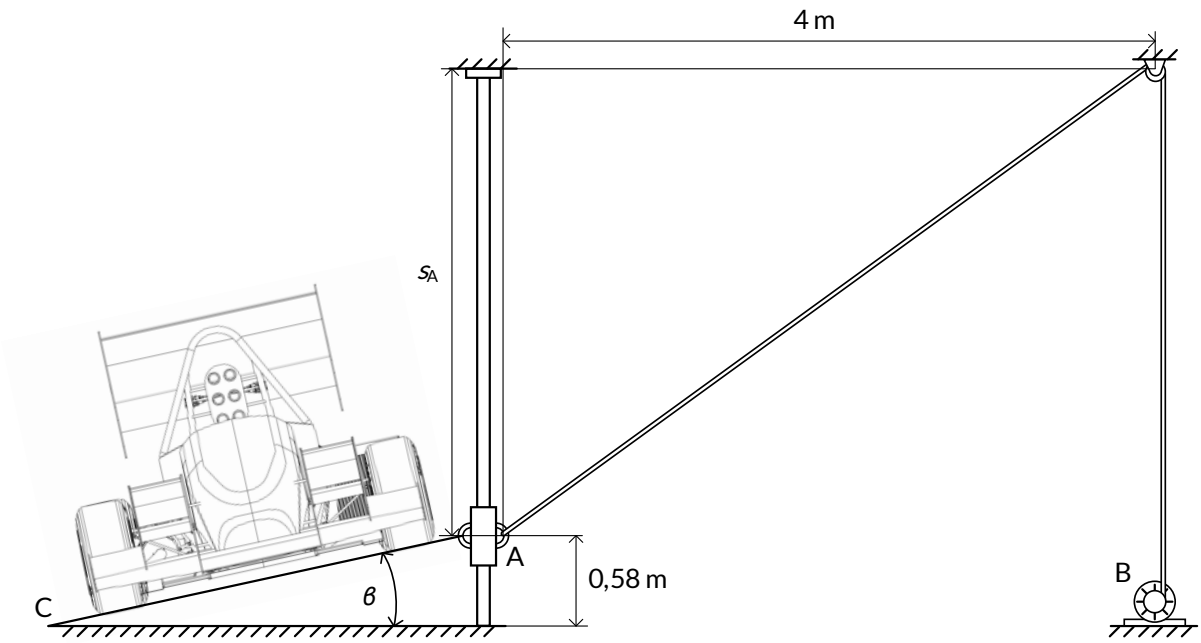

15.1. SOLUTION: 1,2 m/s

EXPLANATION #1:

By determining the velocity pole:

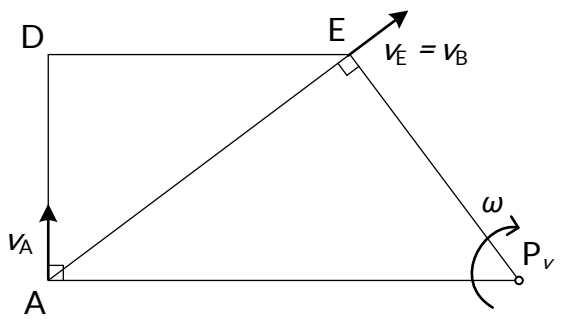

$$v_A = \omega \cdot P_vA \rightarrow \omega = \frac{v_A}{P_vA} = \frac{2}{6{,}25} = 0{,}32 \text{ rad/s}$$

$$v_B = \omega \cdot P_vB = 0{,}32 \cdot 3{,}75 = 1{,}2 \text{ m/s}$$

15.1. EXPLANATION #2:

By using the velocity plan:

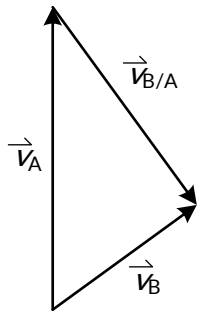

$$\vec{v}_A = \vec{v}_B + \vec{v}_{B/A}$$

Measured:

$$v_B = 1{,}2\,\text{m/s}$$

15.2. SOLUTION: 13,4°

EXPLANATION:

Minimum ground distance by FS Rulebook: 30 mm = 0,03 m

$$\overline{AC}_{hor.} = 0{,}03 \cdot 80 + 0{,}03 = 2{,}43\,\text{m}$$

$$\tan\beta = \frac{0{,}58}{2{,}43} \rightarrow \beta = 13{,}4°$$

Note: We will also accept 13,6°.

Bonus Question

(1 point)

Whose voice from FSAA 2023 is on the audio recording on this link?

Note: Write the person's name & surname in this form without quotation marks:

"*Name Surname*"

SOLUTION: Vincenzo Bevilacqua